PA	EQUIPAGGIAMENTI TECNICI LAVAGGIO	**LS 10** LANCIA SCHIUMA CON SERBATOIO *FOAMER WITH TANK*	I GB	3 26/02/16

SPECIFICHE TECNICHE
SPECIFICATIONS

– PRESSIONE NOMINALE *RATED PRESSURE*	200 bar – 20 MPa (2900 psi)
– PRESSIONE CONSENTITA *PERMISSIBLE PRESSURE*	220 bar – 22 MPa (3200 psi)
– PORTATA MASSIMA *MAX FLOW RATE*	VEDI DIAGRAMMA *SEE CHART BELOW*
– TEMPERATURA MASSIMA *MAX WORKING TEMPERATURE*	60° C (140 °F)

MISURE D'INGOMBRO
OVERALL DIMENSIONS

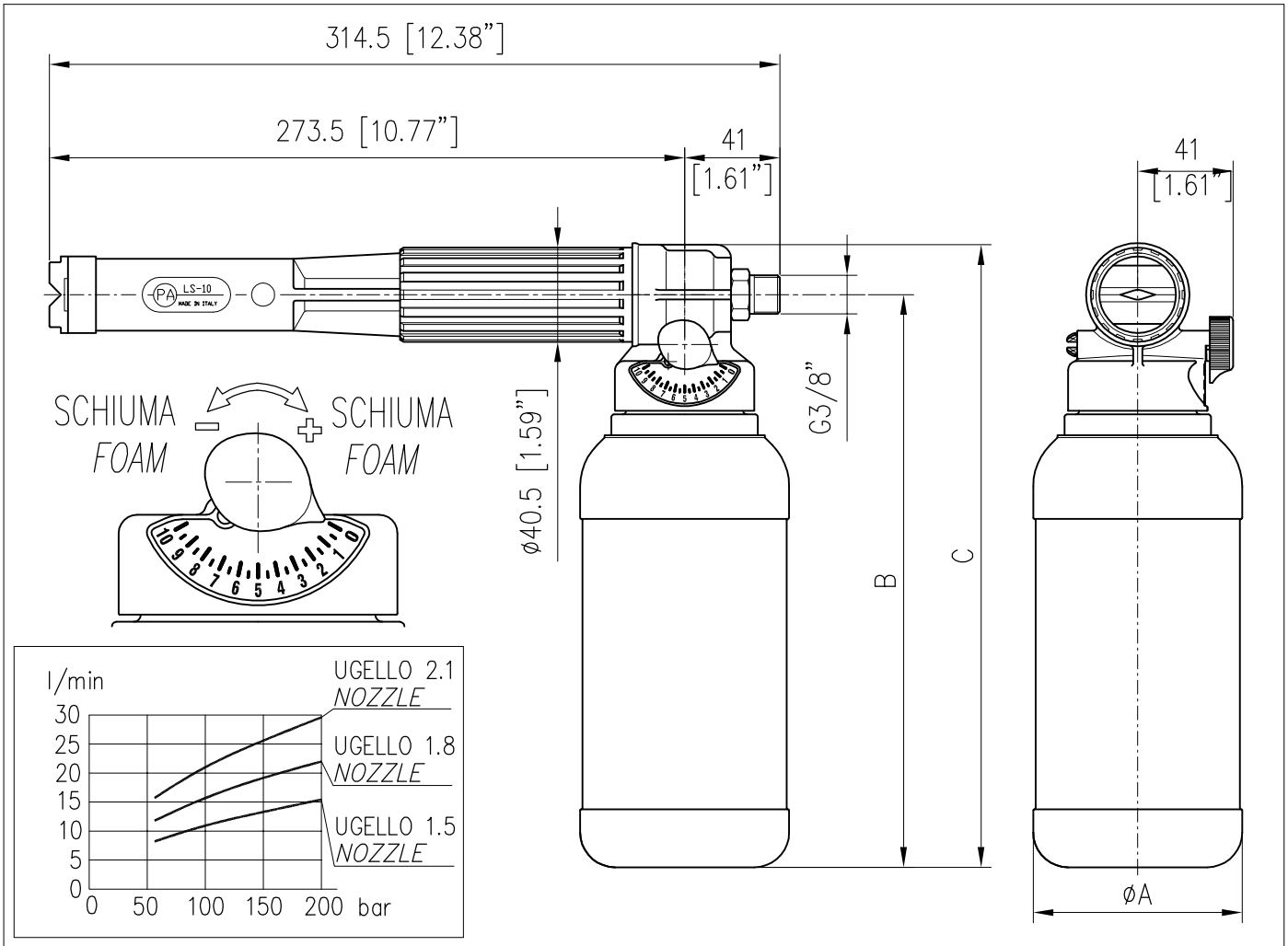

CODICE *CODE*	UGELLO *NOZZLE*	A	B	C	SERBATOIO *TANK*
25.1865.65	ø1.5 [0.06"]	ø90 [3.54"]	247 [9.72"]	269 [10.6"]	l.1 [0.26 USG]
25.1868.65	ø1.5 [0.06"]	ø120 [4.72"]	287 [11.3"]	309 [12.16"]	l.2 [0.52 USG]

C:\00_VAULT_PA\Designs\DB_PA\25\65\25186565.dwg, 26/02/2016 17:56:04, 1:2.99632

25.1865.65 LS10 lan.schiu.G3/8M-ug.1,5mm+serb.1L **25.1868.65 LS10 lan.schiu.G3/8M-ug.1,5mm+serb.2L**

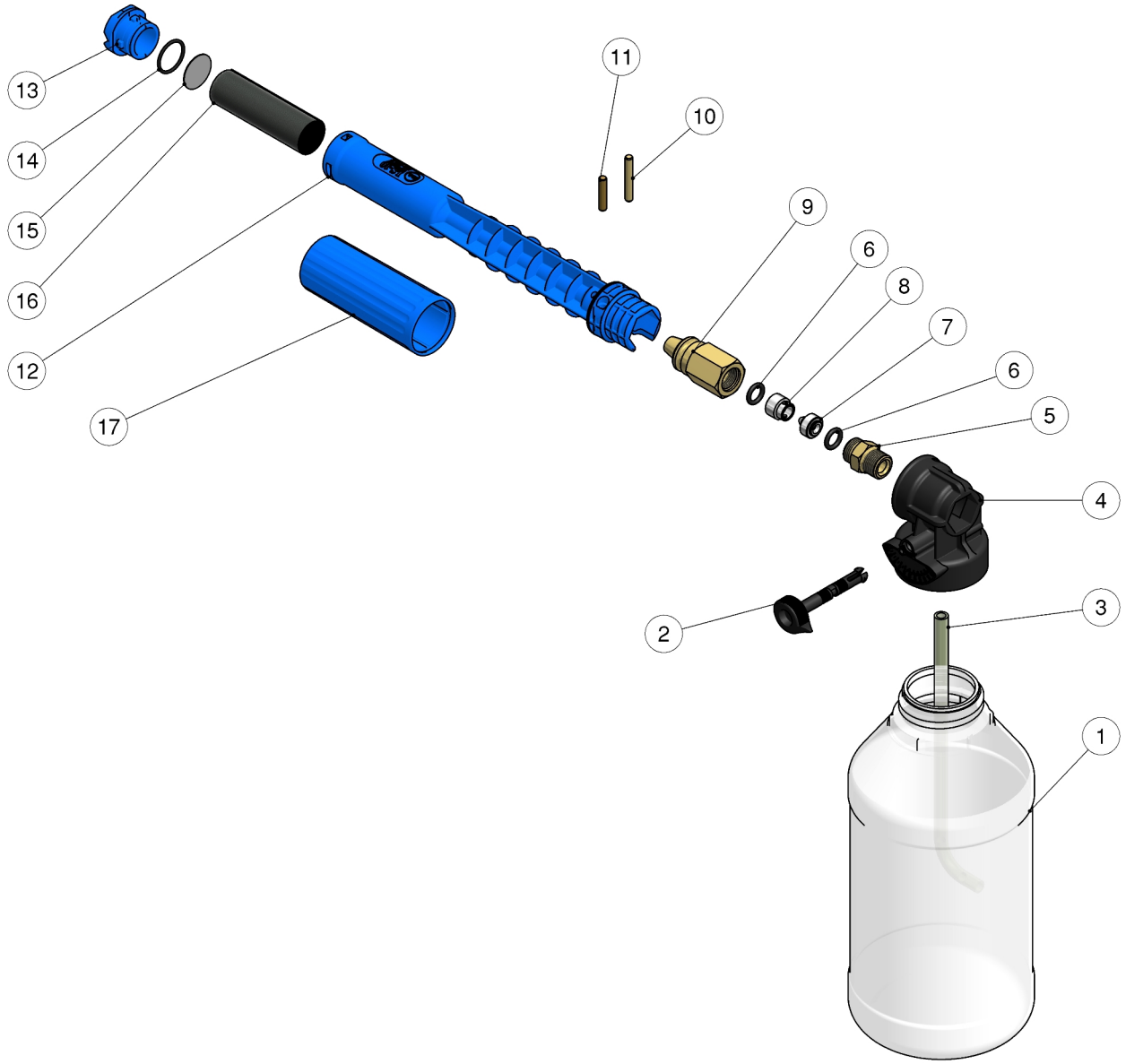

Pos.	Codice	Descrizione	Q.tà	K1	K2	K3	K4	
1	14.6507.00	Serbat.L.2,0 tondo-bocca 45mm (1)	1					10
1	14.6506.25	Serbat.L.1,0 tondo-bocca 45mm (v.2 (1)	1					10
2	25.1817.84	Albero regolatore detergente	1					5
3	29.0852.85	Tubo 6x9x270 mm PVC trasp. (1)	1					10
3	29.0822.85	Tubo 6x9x230mm PVC trasp. (2)	1					10
4	25.1816.84	Corpo porta bottiglia	1					5
5	13.5024.31	Nipplo ott. G3/8MM	1					25
6	10.3174.00	An.OR 2,62x9,93 mm	2					10
7	29.0806.51	Ugello LS10 1,5 mm inox	1					5
8	29.0807.51	Controugello inox	1					5

(1) 25.1868.65 (2) 25.1865.65

Pos.	Codice	Descrizione	Q.tà	K1	K2	K3	K4	
9	25.1839.31	Corpo ott.dos.LS10 x portaserbat.	1					3
10	30.6416.31	Spina cil. 5x34 mm ott.	1					5
11	30.0509.31	Spina cil. 5x24,5 mm ott.	1					10
12	25.1838.85	Corpo lancia LS10 plastica blù	1					5
13	25.1827.85	Ugello ant. LS10 plastica blù v.2	1					5
14	10.3072.10	An.OR 1,78x20,35 mm Vi 70	1					10
15	29.0802.53	An. Diaframma 25x0,5 mm inox	1					10
16	29.0803.85	Filtro PA	1					5
17	25.1828.84	Copertura LS10 plastica blù (2)	1					5
17	25.1828.85	Copertura LS10 plastica blù	1					5

25.1865.65 LS10 foamer 3/8M Bsp-1,5mm nzl+1L tank

25.1868.65 LS10 foamer 3/8M Bsp-1,5mm nzl+2L tank

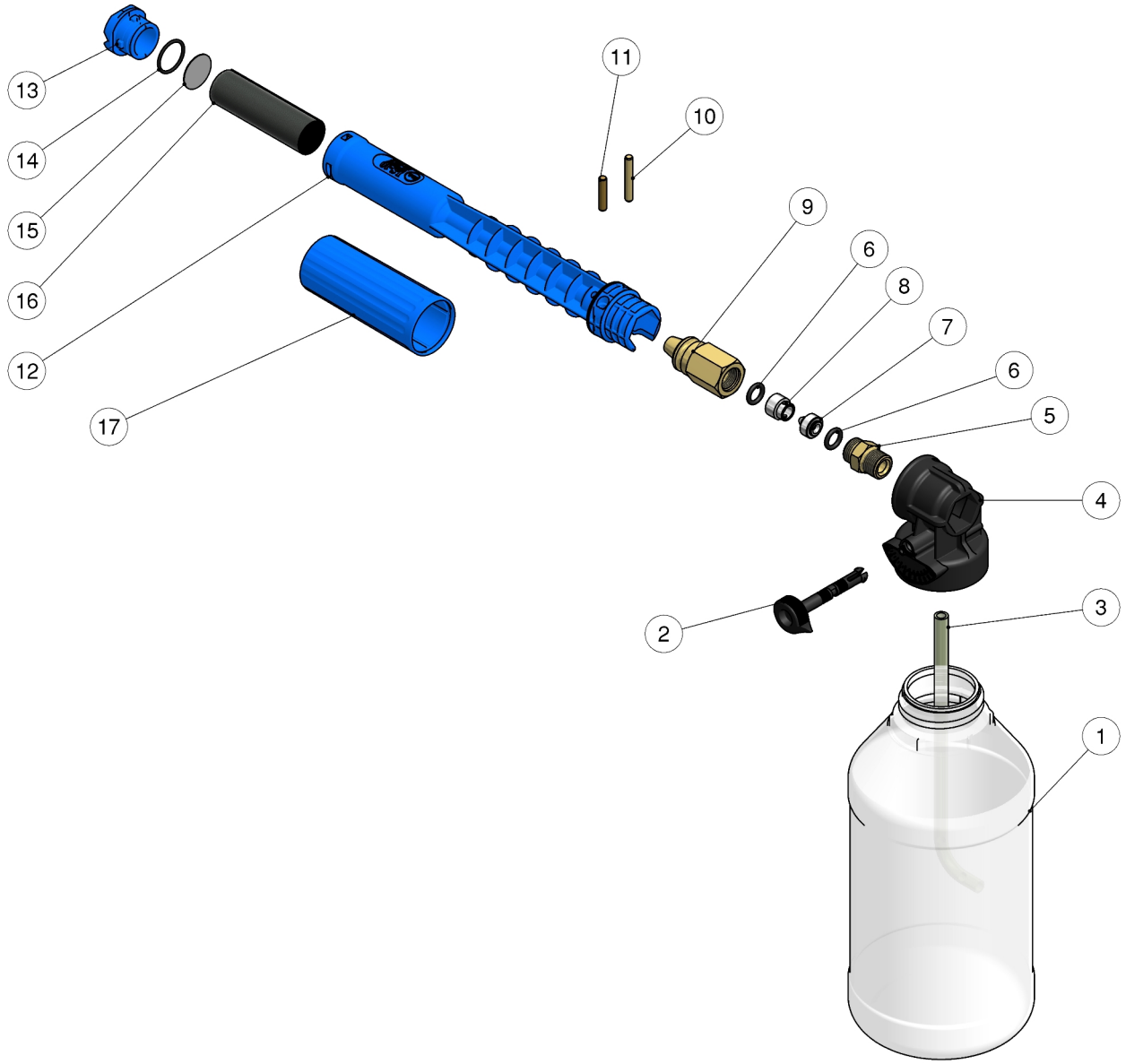

Pos.	P/N	Description	Q.ty	K1	K2	K3	K4	
1	14.6507.00	Tank,L.2,0 round-45 mm inlet (1)	1					10
1	14.6506.25	Tank,L.1,0 round-45mm inlet (v.2 (1)	1					10
2	25.1817.84	Detergent Adjusting Pin	1					5
3	29.0852.85	Hose, 6x9x270 mm PVC transp. (1)	1					10
3	29.0822.85	Hose, 6x9x230mm PVC transp. (2)	1					10
4	25.1816.84	Tank holder	1					5
5	13.5024.31	Nipple, brass 3/8MM Bsp	1					25
6	10.3174.00	O-ring, 2,62x9,93 mm	2					10
7	29.0806.51	Nozzle -LS10, 1,5 mm Sst.	1					5
8	29.0807.51	Counter-nozzle, Sst.	1					5

(1) 25.1868.65 (2) 25.1865.65

Pos.	P/N	Description	Q.ty	K1	K2	K3	K4	
9	25.1839.31	LS 10 Injector body	1					3
10	30.6416.31	Parallel pin, 5x34 mm brass	1					5
11	30.0509.31	Parallel pin, 5x24,5 mm brass	1					10
12	25.1838.85	Casing -LS10 plastic, blue	1					5
13	25.1827.85	Front Nozzle LS10 plastic blue	1					5
14	10.3072.10	O-ring, 1,78x20,35 mm Vi 70	1					10
15	29.0802.53	Diaphragm, 25x0,5 mm Sst.	1					10
16	29.0803.85	Strainer, PA	1					5
17	25.1828.84	Cover -LS10 plastic blue (2)	1					5
17	25.1828.85	Cover -LS10 plastic blue	1					5

P.A. S.p.A.
Via Milano, 13
42048 Rubiera, Reggio Emilia - Italy
Tel +39.0522.623611
Fax +39.0522.629600
info@pa-etl.it

www.pa-etl.it

COMPANY WITH QUALITY MANAGEMENT
SYSTEM CERTIFIED BY DNV
=ISO 9001=